ALL MATERIALS TYPE 316 STAINLESS STEEL ALLOY .

THIS KIT IS DESIGNED FOR A BRICK, BLOCK, PRECAST, OR WOOD WALL.

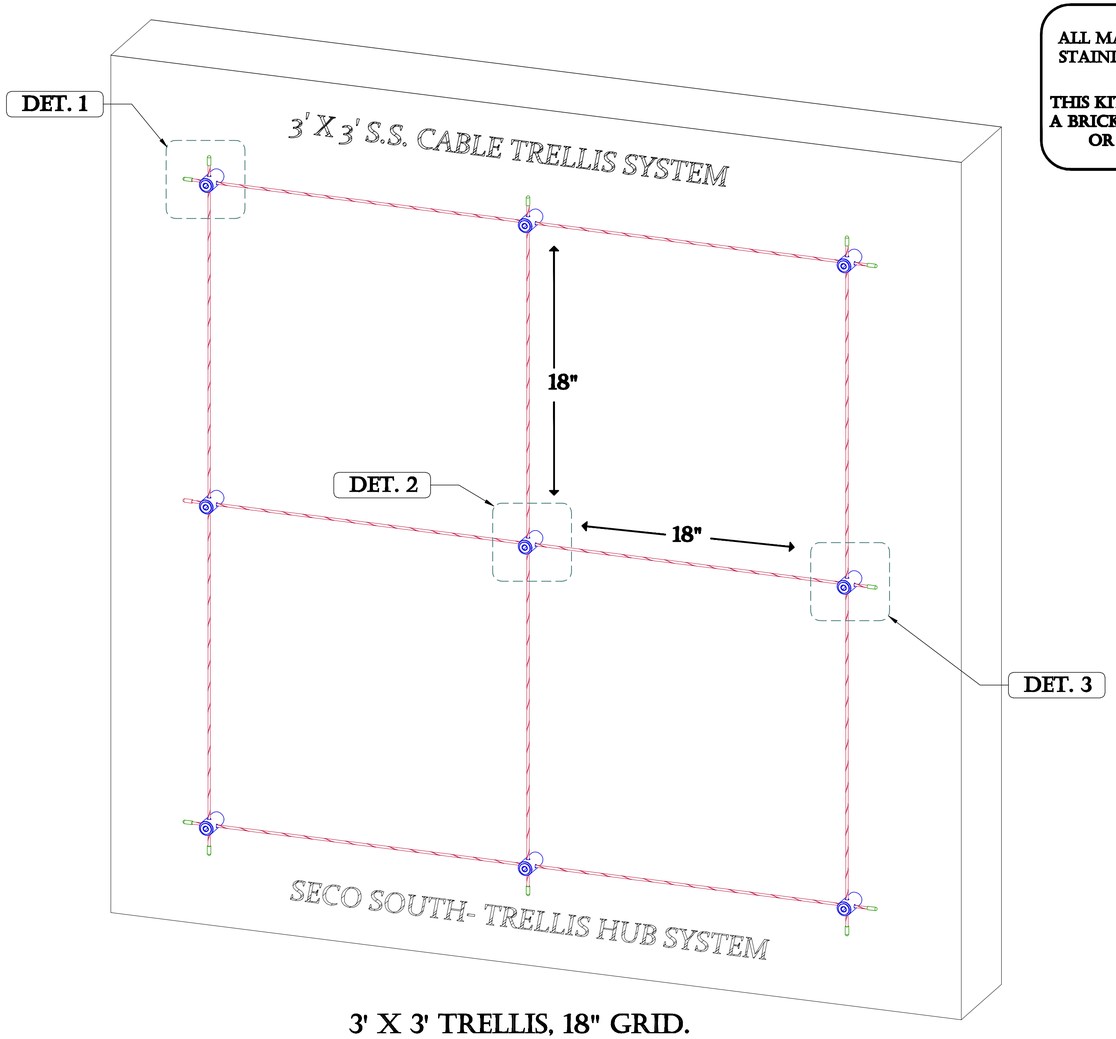

3' X 3' TRELLIS, 18" GRID.

SCALE: 3" = 1'

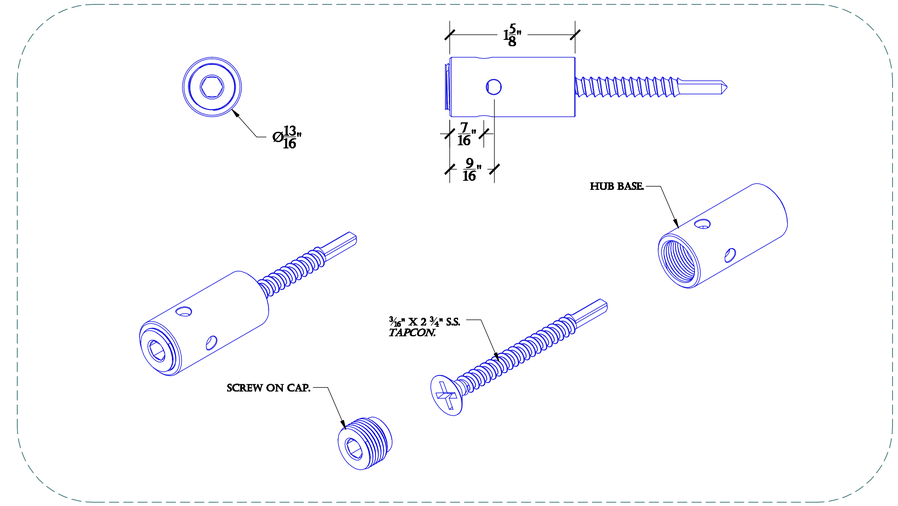

HUB DETAIL.

SCALE: 1" = 1'

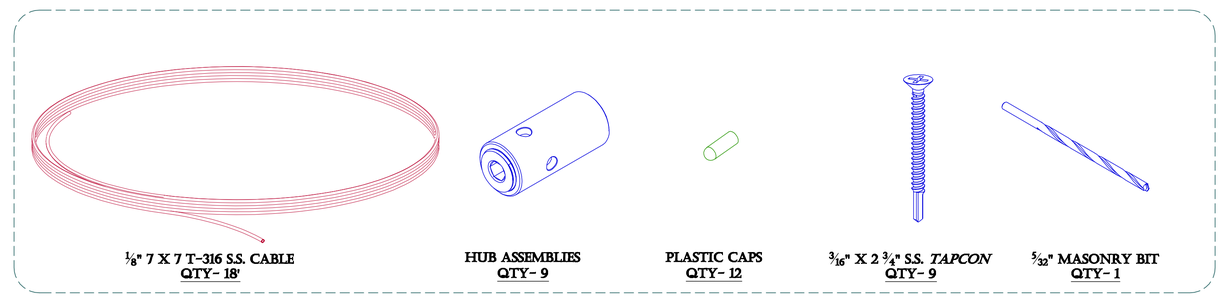

THE 3' X 3', 18" GRID KIT INCLUDES THE FOLLOWING:

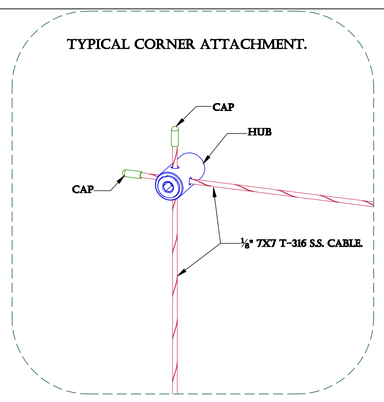

MOUNTING DETAIL 1.

SCALE: 6" = 1'

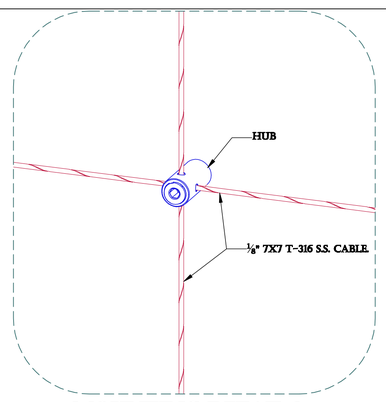

MOUNTING DETAIL 2.

SCALE: 6" = 1'

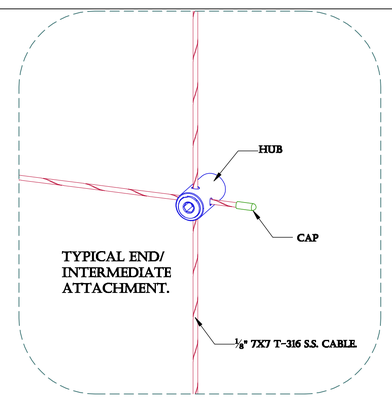

MOUNTING DETAIL 3.

SCALE: 6" = 1'

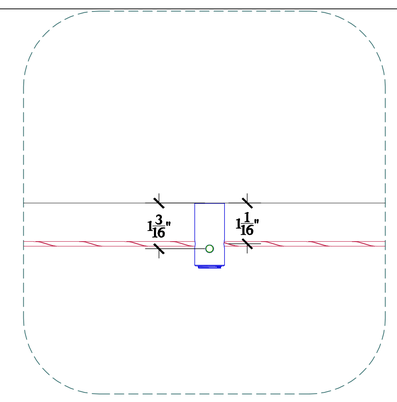

TOP VIEW DETAIL.

SCALE: 6" = 1'

PRODUCT:
S.S. CABLE GREEN WALL/ HUB TRELLIS SYSTEM.

CONTENT:
3' X 3' , 18" GRID STANDARD SYSTEM DETAILS.

DRAWN BY: KELLER, C.

DATE: 10-01-15

PROPRIETARY AND CONFIDENTIAL:
THE INFORMATION CONTAINED IN THIS DRAWING IS THE SOLE PROPERTY OF SECO SOUTH INC. ANY REPRODUCTION IN PART OR AS A WHOLE WITHOUT THE WRITTEN PERMISSION OF SECO SOUTH INC. IS PROHIBITED.

2111 34TH WAY
LARGO,FL 33771
PH:727-536-1924
FAX:727-539-6314
SALES@SECOSOUTH.COM